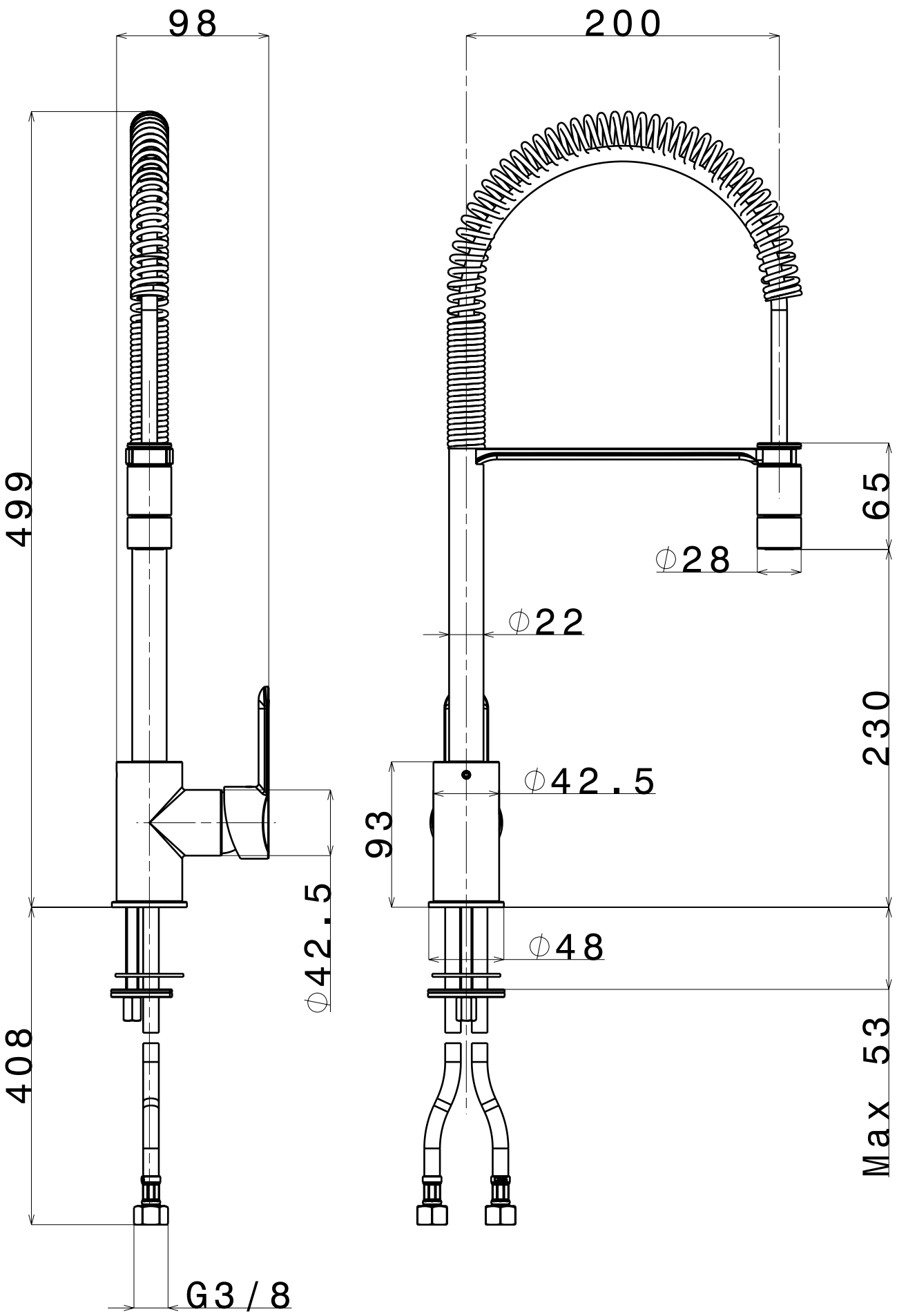
98
200
499
65
⌀28
⌀22
230
⌀42.5
93
⌀42.5
⌀48
408
Max 53
G3/8